VANTAGE

POST-MIX DISPENSER

FEATURES:

- Only 21.5"H (54.61 cm)
- Four and five valve models
- Available with or without integral cold carbonator
- Stainless lower wrap
- Sculptured hood
- Drop-in refrigeration chassis
- Compact coil and valve assembly
- One piece lower housing
- 1/3 HP compressor
- Designed for high ambient use
- Durable stainless steel cabinetry

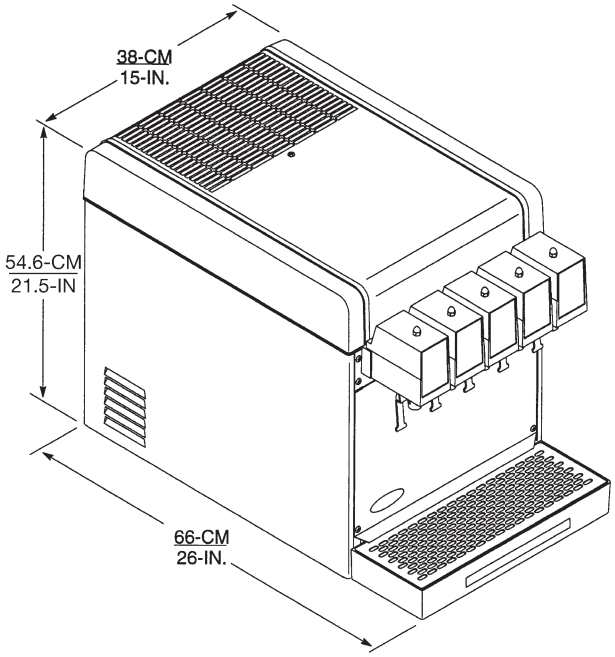

PART NUMBER	DESCRIPTION	ELECTRICAL
561600166	Vantage 4 Flavor, Integral Carbonator	115 V / 60 Hz / 7.4 Amps
561600167	Vantage 5 Flavor, Integral Carbonator	
4923	4" Leg Kit	

TECHNICAL SPECIFICATIONS:

COMPRESSOR . . . . . 1/3 HP

CONDENSER FINISH . . . . . Copper, aluminum

CUP CLEARANCE. . . . . 9.75" (24cm)

INITIAL AVERAGE ICEBANK. . . . . 14 lb (6.4 kg)

REFRIGERANT R-134a

INTEGRAL CARBONATOR
TANK RESERVE. . . . . 56 oz (1.65 L)

ICE BANK CONTROL . . . . . Electronic

CARBONATOR PUMP
FILL RATE . . . . . 2 oz/sec (60 mL)

INLET FITTINGS . . . . . Syrup: 0.25" barb
Water: 0.25" flare
CO_2: 0.25" flare

VALVES . . . . . Standard Flow

VALVE TYPES . . . . . UF-1 or SF-1

DRAW PERFORMANCE . . . . . Number of drinks below 4.4°C (40°F):

Integral Carbonator:
24°C (75°F) ambient w/ draw rate of two 12 oz drinks per minute = 132
& 32°C (90°F) ambient w/ draw rate of two 12 oz drinks/min = 65

Remote Carbonator:
24°C (75°F) ambient w/ draw rate of two 12 oz drinks per minute = 193
& 32°C (90°F) ambient w/ draw rate of two 12 oz drinks/min = 71

SHIPPING WEIGHT . . . . . 98 lb (44 kg)

AGENCY LISTINGS . . . . . UL NSF CE

IN THE U.S.A.
Ph: 800.238.3600
Fax: 763.488.4283

OUTSIDE THE U.S.A.
Ph: 763.488.8200
Fax: 763.488.4283

101 Broadway Street West
Osseo, MN 55369
www.cornelius.com

© 2006 IMI CORNELIUS

For more information or to place an order, contact your sales representative or authorized distributor.